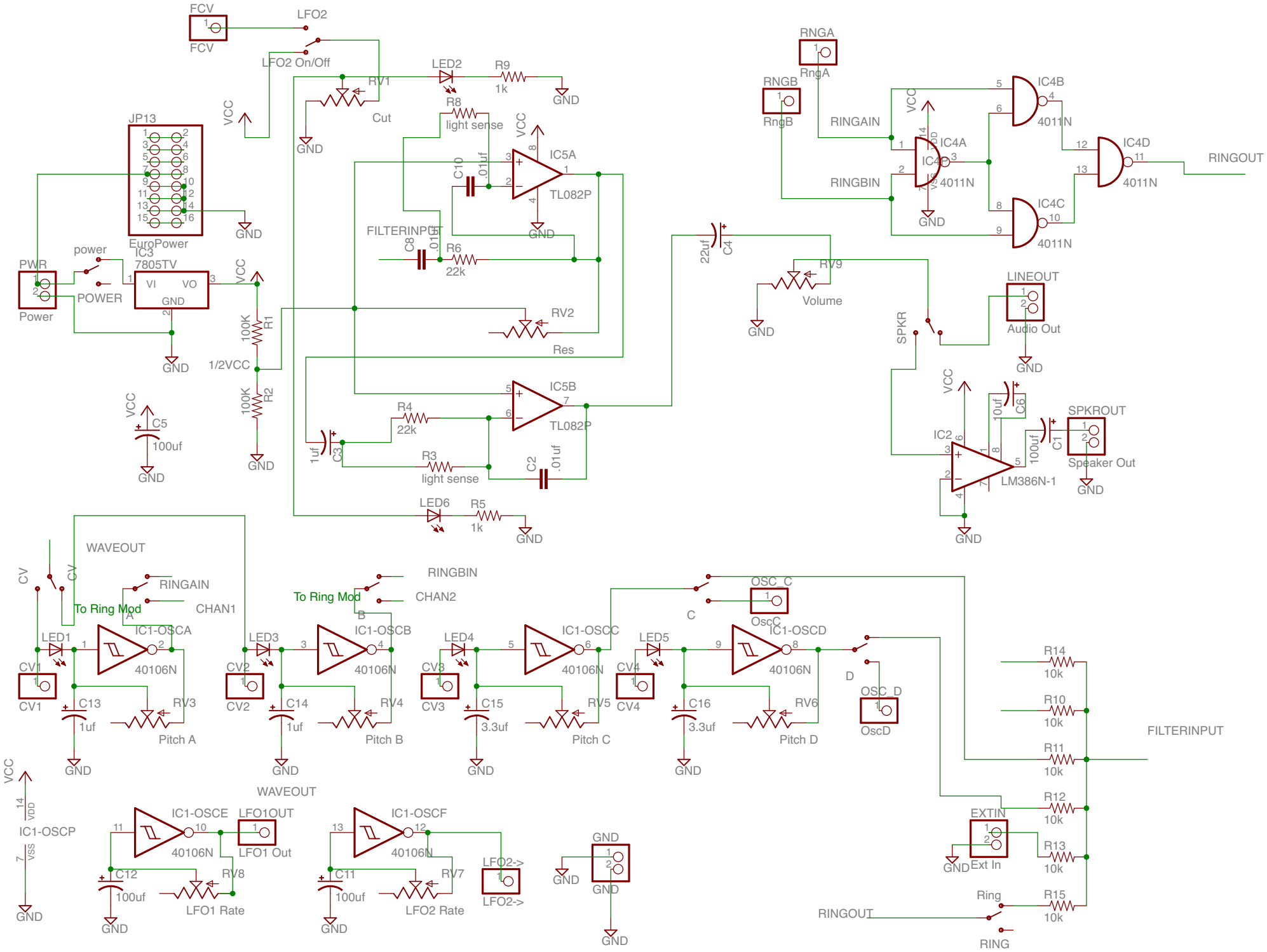

9/15/16 1:54 PM /Users/CCT/Documents/eagle/VoS Workshop Board/VoSWorkshopBoard1.2.sch (Sheet: 1/1)